Everest & Jennings®

A Graham-Field Brand

Paramount Manual Wheelchair

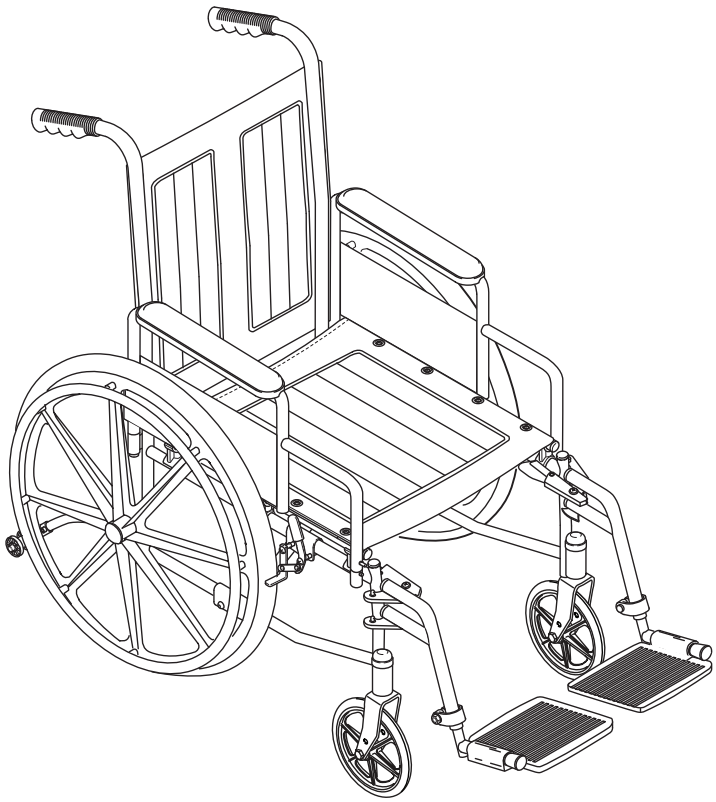

Owner's Manual

GF0600047RevA06
©GF Health Products, Inc.
August 2006

Read this manual before operating your wheelchair

CONTENTS

I INTRODUCTION.....3

II IMPORTANT SAFETY PRECAUTIONS.....5

III GETTING STARTED.....8

IV HANDLING TIPS.....9

V ADJUSTMENTS.....14

VI TRANSPORTING THE E&J PARAMOUNT.....23

VII MAINTENANCE.....25

VIII TROUBLESHOOTING.....31

IX LIMITED WARRANTY.....33

X INDEX.....35

READ THIS MANUAL BEFORE OPERATING YOUR WHEELCHAIR

I INTRODUCTION

Important safety, operating, and maintenance instructions that warrant your attention are included in this owner's manual. Read the entire manual carefully before operating your new wheelchair, and refer to it as often as necessary to help maintain good performance standards.

Consult your healthcare professional and Graham-Field Health Products dealer for assistance in developing and learning safe and effective techniques for performing your daily activities according to your individual physical abilities and needs, and to make certain that your wheelchair is properly prescribed and adjusted for your use.

The safety precautions in this manual are general warnings intended to be used only as basic guidelines. You may find it necessary to develop your own methods for safely solving frequently encountered challenges. Again, consult your professional medical advisors for their recommendations about safety methods, and never hesitate to ask for their assistance.

Your wheelchair should receive frequent, regularly scheduled maintenance, including an inspection of the mechanical parts, to ensure proper operation. Some suggested inspection procedures, troubleshooting procedures, and adjustment procedures are included in this manual. When it comes to service and repair, remember that your Graham-Field Health Products dealer knows your wheelchair best.

All information and specifications in this manual are current at the time of printing. However, because it is Graham-Field Health Products policy to continually improve the quality and reliability of all our products, we reserve the right to make changes at any time without notice.

Thank you for choosing an Everest & Jennings® product. We at Graham-Field Health Products wish to assure you of our continuing commitment to provide innovation and quality in our products. The Paramount is a manual, folding, lightweight wheelchair, suitable for frequent users who require a lightweight, portable wheelchair, fitted to their anatomy, without the need of customization or alteration to the center of gravity. The Paramount is intended for indoor and/or outdoor use.

The person performing adjustments on the Paramount has the responsibility of making certain that the user can safely operate the wheelchair with the adjustments selected. This person must evaluate the user's ability, weight, physical condition, the environment in which the wheelchair will be used, and the terrain over which the wheelchair will travel. We recommend the use of anti-tippers at all times.

Graham-Field Health Products is not responsible for typographical errors. Packaging, warranties and products are subject to change without notice.

Please note the following special statements, used throughout this manual, and their significance:

Note: Special information set off from the text.

▲ Caution: Damage to equipment is possible.

⚠ WARNING: Personal injury could occur.

II IMPORTANT SAFETY PRECAUTIONS

IMPORTANT SAFETY PRECAUTIONS: ALWAYS FOLLOW THESE SAFETY PRECAUTIONS WHEN USING YOUR WHEELCHAIR. FAILURE TO DO SO COULD RESULT IN PERSONAL INJURY TO YOU OR OTHERS OR DAMAGE TO YOUR WHEELCHAIR.

Safety requires the constant attention of the wheelchair user and the attendant. It is extremely important to learn and always use safe methods of performing basic daily activities. Always consult your healthcare professional to determine those methods most suitable for your individual abilities.

Protect yourself and your wheelchair by having your Paramount serviced regularly. Whenever any part of your Paramount is not functioning properly, contact your Graham-Field Health Products dealer immediately, as a hazardous situation could result, causing personal injury or damage to your wheelchair. **ONLY EXCELLENT CONDITION IS ACCEPTABLE WHERE SAFETY IS CONCERNED**. Periodic inspection, adjustment, and replacement of worn parts will provide many years of superb performance.

WARNINGS

⚠ **WARNING: Paramount maximum weight capacity is 500 lb. (227 kg).**

⚠ **WARNING: Do not operate this wheelchair on streets or roadways.**

⚠ **WARNING: Do not operate this wheelchair on hilly or rough terrain, sand, wet or icy surfaces, or surfaces with impaired traction. Ensure that pathway is clear of all obstacles.**

⚠ **WARNING: Do not turn wheelchair while going downhill, as wheelchair could tip over.**

⚠ **WARNING: Do not attempt inclines without anti-tippers installed. Do not attempt any incline or decline greater than six degrees (10% grade, or one foot of rise or fall per ten feet of ramp length).**

⚠ **WARNING: This wheelchair does not offer seating or occupant restraint equivalent to the seat provided in a motor vehicle! To increase your safety while traveling in a motor vehicle, always transfer to the vehicle seat and use the restraint provided by the vehicle manufacturer.**

⚠ **WARNING: Do not tie down or attach anything to the wheels. This could cause tipping and possibly result in injury or damage to the wheelchair.**

⚠ **WARNING: The footplates' lowest point should clear the ground by at least 2 1/2 inches, to permit proper clearance of potential obstruction.**

⚠ **WARNING: Doing a "wheelie" (tilting the wheelchair backward until it reaches its balance point) is dangerous and could result in personal injury to the user.**

⚠ **WARNING: Do not stand or step on the footplates while transferring to or from your wheelchair. This could cause the wheelchair to tip or may cause personal injury or damage to your wheelchair.**

⚠ **WARNING: Always engage wheel locks before transferring, using a wheelchair lift or using an elevator.**

⚠ **WARNING: Ensure that wheelchair is on a stable, level surface and engage wheel locks before and during transfer.**

⚠ **WARNING: Operate only with anti-tippers in place when leaning or tipping.**

⚠ **WARNING: Do not lean over the top of the wheelchair back. This could cause the wheelchair to tip over.**

⚠ **WARNING: To reduce the risk of tipping before leaning or reaching forward, sit back in the seat and rotate casters fully toward front of wheelchair.**

⚠ **WARNING: Unauthorized modification or the use of non-Everest & Jennings® replacement parts could change the structure of the wheelchair, void the warranty, and create a hazardous condition resulting in serious personal injury.**

⚠ **WARNING: Do not lean on this wheelchair or use it as a walker—these are practices which could result in loss of balance and personal injury.**

⚠ **WARNING: Do not use your wheelchair on escalators.**

⚠ **WARNING: Wheel locks are not brakes. Do not use the wheel locks to slow down your wheelchair, or while the wheelchair is moving. Wheel locks are only intended to keep the wheelchair in place when it is at a complete stop.**

⚠ **WARNING: GF Health Products, Inc. specifically disclaims responsibility for any personal injury or property damage which may occur during any use which does not comply with federal, state, or local laws or ordinances.**

III GETTING STARTED

Please familiarize yourself with main components, identified in Paramount illustration below.

Designs and specifications are subject to change without notice.

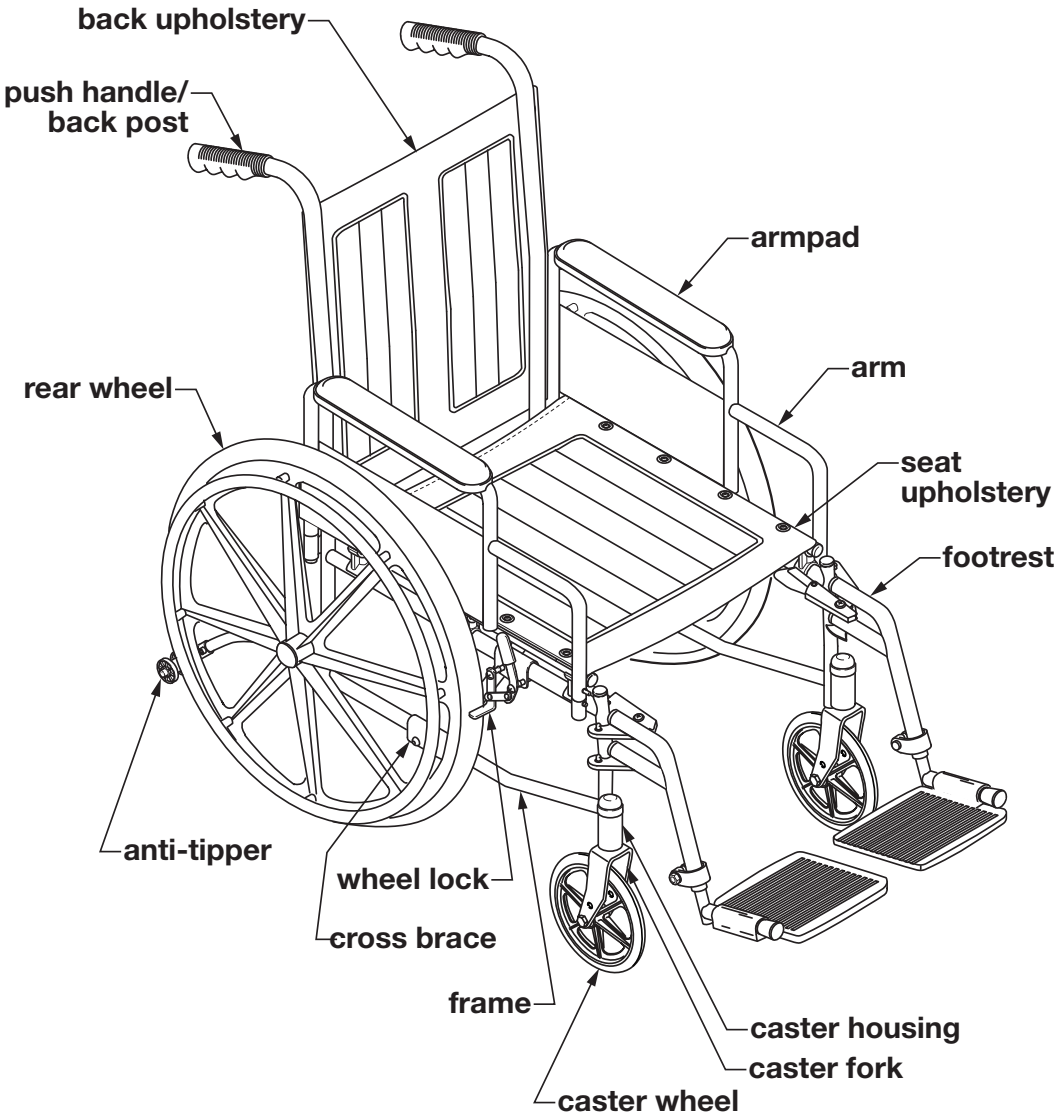

IV HANDLING TIPS

The Everest & Jennings® Paramount has been designed and engineered to perform as a stable and well balanced unit when used for its intended purpose. However, it is possible to tip the Paramount over if it is used improperly. We urge you to learn the characteristics of your wheelchair. It is most important to learn safe methods to perform the daily activities basic to your lifestyle. Consult your medical professionals for assistance in developing the skills and proper techniques to perform all activities safely.

BALANCE

Proper balance is the key to maintaining the stability of your wheelchair. Reaching, bending, and transferring to or from a wheelchair will change the weight distribution and center of gravity of you and your wheelchair. When performing such activities, do so as instructed in the following paragraphs to avoid tipping the wheelchair.

TRANSFER ACTIVITIES

⚠ **WARNING: Always ensure that the wheelchair is on a stable, level surface and engage wheel locks before transfer.**

⚠ **WARNING: Do not step on the footplates; this could cause the wheelchair to tip. Fold them up, and either detach them, or swing them aside.**

⚠ **WARNING: There is a critical moment when there is little or no seat platform beneath you. Take every precaution to reduce this unsupported distance before you attempt transfer.**

Transferring into or out of a wheelchair is a very difficult maneuver. Exercise extreme care when transferring without the aid of either an attendant or a patient lift. Consult your physician, nurse, or physical therapist for assistance in developing your individual technique.

Make sure that the wheelchair is stabilized, and will not move or slide during the transfer. Take extra precaution to prevent tipping. Use good body mechanics to prevent personal injury.

REACHING / BENDING

⚠ **WARNING: Always turn the casters frontward to provide stability while reaching. If in doubt, ask for assistance or use a device that will extend your reach without requiring you to shift your weight.**

Although it is not recommended, you may find it occasionally necessary to lean or reach from your wheelchair. Consult with your health-care professional for assistance in developing your personal safe reaching or moving techniques suited to your ability and restrictions.

Forward or sideward

⚠ **WARNING: Do not attempt to reach objects if you are required to move forward in the seat. Do not attempt to retrieve objects from the floor if you must reach down between your knees. Do not shift your weight in the direction that you are reaching and/or bending; this could cause the wheelchair to tip.**

1. Maneuver the wheelchair as close as possible to the object you wish to reach.
2. Rotate both casters fully forward: Go forward, and then back the wheelchair toward the object to swing the casters fully forward.
3. Engage both wheel locks.
4. Ensure that the casters are rotated fully forward before reaching. If not, repeat step 2.

Backward

⚠ **WARNING: Do not engage the wheel locks while reaching or bending backward. Should your weight suddenly shift accidentally, it is better to roll in that direction than to tip over.**

⚠ **WARNING: Do not lean over the back upholstery; this could cause the wheelchair to tip.**

1. Maneuver the wheelchair as close as possible to the object; the rear wheels will limit how close you can get.
2. Rotate both casters fully forward: Go forward, and then back the wheelchair toward the object to swing the casters fully forward.
3. Reach only as far as your arm will extend without changing your sitting position. If in doubt, reposition the wheelchair or ask for assistance.

RAMPS AND INCLINES

⚠ **WARNING: During descent, the footplates' lowest point should be no closer to the ground than 2 1/2 inches to permit proper clearance.**

⚠ **WARNING: Do not attempt inclines without anti-tippers installed. Do not attempt any incline or decline of more than 6 degrees (10% grade, or one foot of rise or fall per ten feet of ramp length).**

⚠ **WARNING: Do not use wheel locks to slow your descent. Attempting to use wheel locks is likely to result in accidental locking that could cause the wheelchair to stop abruptly, suddenly pitch forward, or tip sideways.**

⚠ **WARNING: Avoid changing direction while descending a ramp or incline, as this could cause instability.**

Most people are capable of negotiating short inclines without assistance, depending upon upper body strength, endurance, and the degree of incline. Know your own capabilities and limitations in terms of strength and endurance before attempting to negotiate an incline or decline. Practice with an attendant or healthcare professional first before attempting any inclines, declines curbs or ramps. Always inspect the ramp for hazards such as holes, slippery or uneven surfaces, etc. before starting up or down. If you can not see the entire ramp, ask someone to inspect it for you.

Ascent

Lean the upper part of your body slightly forward as you ascend the incline. If it becomes necessary to stop on the incline, avoid any abrupt or sudden forward movement as you resume climbing, this could cause tipping.

Descent

Always face forward when going down a ramp, but do not lean forward; this could cause tipping. Lean slightly backward to increase stability. It is critical to keep the wheelchair under control at all times. Descent should be made slowly and safely by grasping the handrims; however, use care, as friction heat will be generated. We recommend the use of gloves to reduce the effects of friction heat, but going slower is a better alternative.

CURBS AND STEPS

Curbs, steps and stairways are dangerous obstacles that confront the wheelchair user. When you encounter curbs, find a way around, or use the ramps now available in most locations. If you encounter steps and there is no ramp available, avoid the steps by utilizing the disabled designated elevators now required in most locations.

⚠ **WARNING: Never attempt to negotiate steps, stairs or escalators in your Paramount.**

V ADJUSTMENTS

The Paramount offers several adjustments to make it easier and more comfortable to drive. Part VII, MAINTENANCE, offers preventive maintenance suggestions for keeping your wheelchair in excellent condition; ensure that all components are in excellent condition before adjusting. The following are recommended methods; after a few adjustments, you may develop your own. Always consult your Graham-Field Health Products dealer for assistance.

The person performing adjustments on the Paramount has the responsibility of making certain that the user can safely operate the wheelchair with the adjustments selected. This person must evaluate the user's ability, weight, physical condition, the environment in which the wheelchair will be used, and the terrain over which the wheelchair will travel.

All adjustments and their page locations are referenced in the index at the end of this manual. Specific tools needed to perform each adjustment are identified in adjustment directions. A complete list of tools needed to perform all adjustments in this section follows:

Phillips screwdriver
Two 1/2" wrenches
3/8" wrench
M13 wrench
M6 hex key

REAR WHEELS & CASTERS

We recommend that you do not replace or adjust rear wheel or caster components yourself, since special tools and training are required. Please contact your Graham-Field Health Products dealer when your rear wheels or casters need adjustment.

ARMS

All Paramount arms are removable.

Remove arm

1. Depress lower arm release pin until it unlocks.
2. Hold arm by center of armpad. Lift straight up and off.

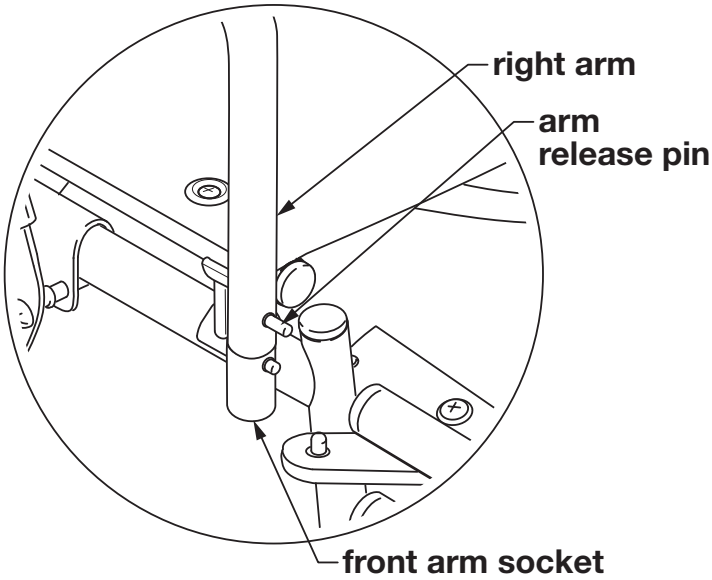

remove arm

Install arm

Hold arm by center of armpad. Lower arm straight down into sockets and push to lock. Ensure that release pin is locked in place.

⚠ **WARNING: Ensure that arm release is locked in place before occupying or operating wheelchair.**

FRONT RIGGING

FOOTREST—DETACHABLE, SWINGAWAY

⚠ **WARNING: The footplates' lowest point should be no closer to the ground than 2 1/2 inches, to permit proper clearance.**

⚠ **WARNING: Do not stand on the footplates; this could cause the wheelchair to tip.**

Remove footrest

1. To release lock, pull swingaway release lever forward, toward front of wheelchair. Footrest will swing outward.
2. To remove, lift footrest straight up off wheelchair hinge pins.

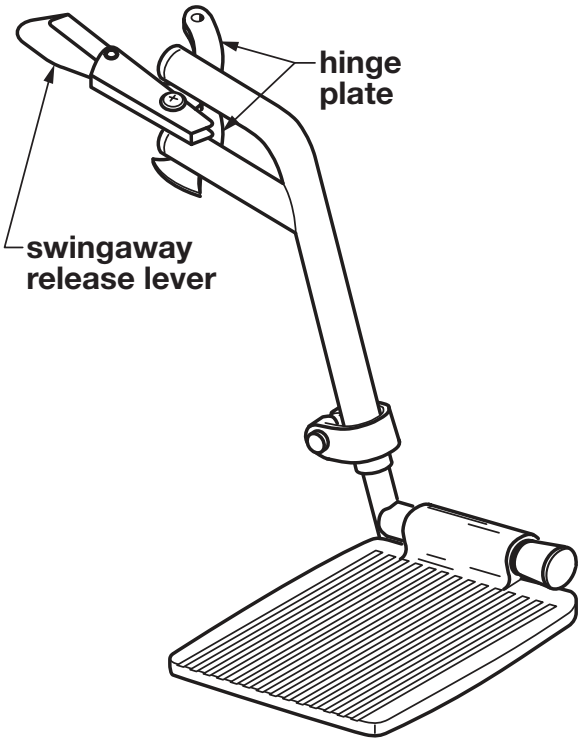

remove footrest (left shown)

Attach footrest

1. Set footrest on wheelchair (so that footrest hinge plates engage wheelchair hinge pins).
2. Swing footrest inward.
3. Ensure that swingaway release lever is locked in a rearward position, toward back of wheelchair.

⚠ **WARNING: Ensure that footrests are locked in place before occupying or operating wheelchair.**

Adjust footplate extension length

Two 1/2" wrenches

1. Loosen footrest clamp: Use a two 1/2" wrenches to loosen nut enough so that footplate extension tube slides inside footrest tube.
2. Reposition footplate extension in desired position.
3. Tighten footrest clamp: Use a two 1/2" wrenches to resecure clamp nut.
4. Follow steps 1-3 to adjust other footplate extension length. Ensure that both footplate extension clamps are securely fastened and that minimum ground clearance is 2 1/2 inches.

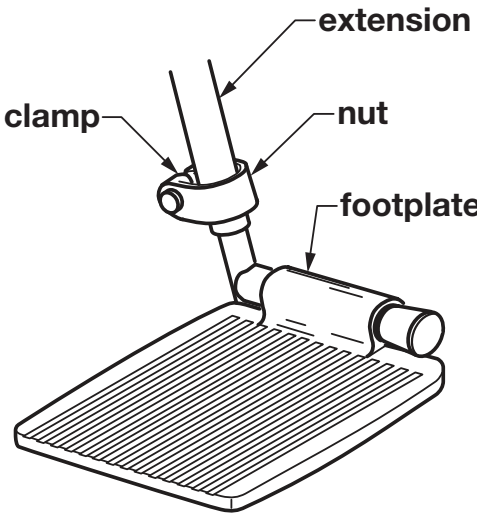

footplate extension, adjust length

⚠ **WARNING: Ensure that footplates are securely clamped before occupying or operating wheelchair.**

ELEVATING LEGREST (OPTIONAL)—DETACHABLE, SWINGAWAY

⚠ **WARNING: The footplates' lowest point should be no closer to the ground than 2 1/2 inches, to permit proper clearance.**

⚠ **WARNING: Do not stand on the footplates; this could cause the wheelchair to tip.**

Remove elevating legrest

1. To release lock, pull swingaway release lever forward, toward front of wheelchair. Legrest will swing outward.
2. To remove, lift legrest straight up off wheelchair hinge pins.

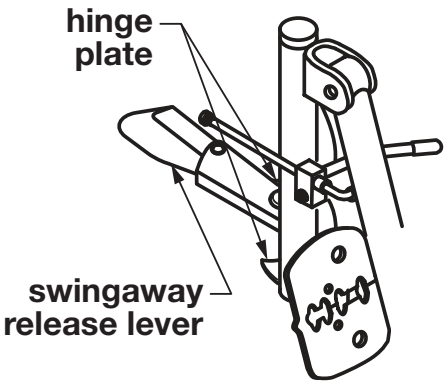

remove elevating legrest (upper part only shown)

Attach elevating legrest

1. Set legrest on wheelchair (so that legrest hinge plates engage wheelchair hinge pins).
2. Swing legrest inward.
3. Ensure that legrest is locked in place and that swingaway release lever is locked in a rearward position, toward back of wheelchair.

⚠ **WARNING: Ensure that legrests are locked in place before occupying or operating wheelchair.**

Adjust legrest elevation

Note: It is possible to RAISE elevating legrest without unlocking legrest release. As a safety feature, however, you must unlock legrest release in order to LOWER elevating legrest.

1. To release elevation lock, pull legrest release lever up toward back of wheelchair.
2. Swing legrest up to desired position.
3. Lock legrest elevation level: Pull lever toward front of wheelchair.
4. Ensure that elevating legrest is locked in position.

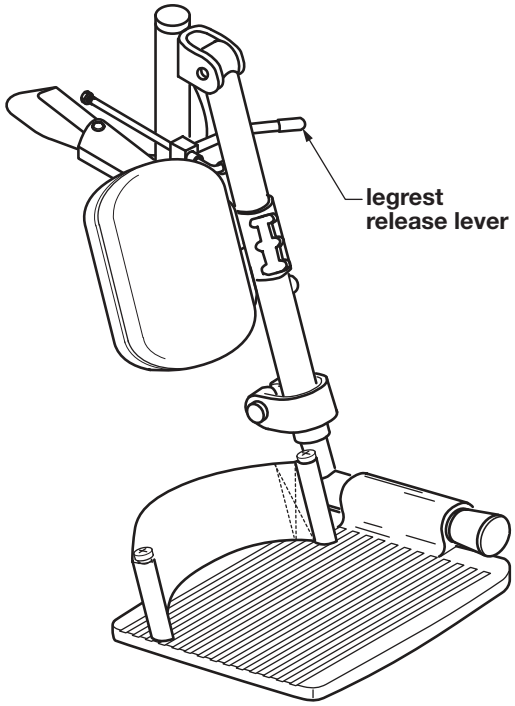

adjust legrest elevation

⚠ **WARNING: Ensure that legrests are locked in place before occupying or operating wheelchair.**

Adjust legrest footplate extension length

See **Adjust footplate extension length** in Footrest—Detachable, Swingaway section.

Adjust elevating legrest calf pad position

The legrest calf pad has three mounting positions one inch apart on legrest tube. Refer to picture at right. To adjust:

1. Rotate calf pad/ hinge plate assembly on legrest tube so that legrest tube stop is in center of hinge plate slot.
2. Slide calf pad / hinge plate assembly up or down on legrest tube to desired position.
3. Rotate calf pad / hinge plate assembly on legrest tube so that legrest tube stop is aligned in desired position.

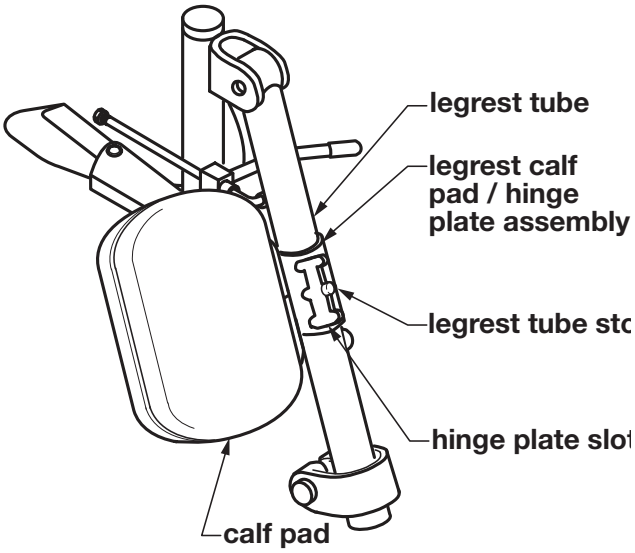

adjust calf pad position, elevating legrest (footplate extension not shown)

⚠ **WARNING: Ensure that calf pads are locked in place before occupying or operating wheelchair.**

CROSSBRACES

Tighten crossbraces

M13 wrench, M6 hex key

Check the crossbraces to ensure that the bolt and nut securing both crossbraces in the center of the wheelchair are secure (crossbraces should be loose enough to fold easily, yet snug enough to take up excess play). Use a M13 wrench and M6 hex key to tighten.

WHEEL LOCKS

Adjust wheel locks

One 3/8" wrench

1. Use a 7/16" wrench to loosen the two clamp bolts until the lock slides on the frame.
2. Place the wheel lock in the locked position and slide it into contact with the tire.
3. Place the wheel lock in the unlocked position and slide it 3/8" closer to the tire.

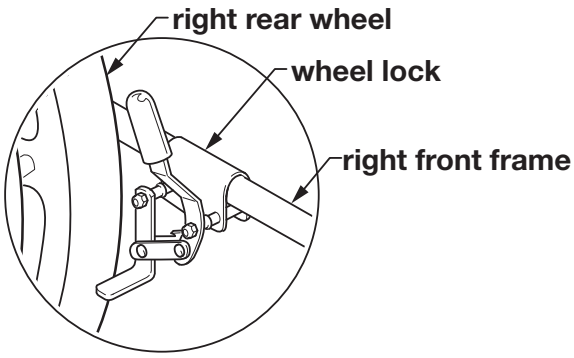

wheel lock
shown unlocked

4. Use a 3/8" wrench to tighten the two clamp bolts and engage the lock to check the fit. The lock should indent the tire at least 3/8". Tighten clamp bolts securely to eliminate wheel lock movement on frame.

⚠ **WARNING: Ensure that wheel locks are adjusted so that they lock in place appropriately before occupying or operating wheelchair.**

VI TRANSPORTING THE E&J PARAMOUNT

⚠ **WARNING: This wheelchair does not offer seating or occupant restraint equivalent to the seat provided in a motor vehicle! To increase your safety while traveling in a motor vehicle, always transfer to the vehicle seat and use the restraint provided by the vehicle manufacturer.**

The Paramount can easily be transported by folding the wheelchair:

1. Detach front rigging from wheelchair.
2. Remove the seat cushion, if so equipped.
3. Fold the wheelchair: pull up sharply on the seat sling at front and rear center at the same time. To fold wheelchair completely, tip the wheelchair sideways (so wheel won't drag) and press sides together.

For reassembly, see the following page.

REASSEMBLY

1. Push down with even pressure on seat tubes on both sides.

⚠ **WARNING: Do not place your hand between seat tube and side panel.**

2. Attach footrests or legrests to wheelchair.
3. Reinstall the seat cushion, if so equipped.

⚠ **WARNING: Ensure that footrests or legrests are locked in place before occupying or operating wheelchair.**

VII MAINTENANCE

Protect your E&J Paramount by having it serviced regularly. Proper care and maintenance are essential to keep your wheelchair in safe working condition. Periodic inspection, adjustment, and replacement of worn parts will provide many years of superb performance. When you believe that a component or part of your Paramount is not functioning properly, contact your Graham-Field Health Products dealer immediately, as a potentially hazardous condition could result. Only excellent condition is acceptable where safety is concerned.

Service manual

There is no service manual for the Paramount. Please contact your Graham-Field Health Products dealer with service questions not answered by this manual.

Note: We recommend that you have a Graham-Field Health Products dealer perform a six month maintenance check, as the dealer may find and correct a problem which might otherwise go undetected and eventually cause more serious problems and/or personal injury.

Do-it-yourself maintenance

You can do many of the scheduled maintenance tasks yourself, if you have mechanical ability and a few basic tools. Refer to the maintenance schedule on the next page for the recommended regularity of each procedure. If any maintenance procedure is not clear to you, ask your Graham-Field Health Products dealer for assistance.

▲ **Caution: Improper maintenance can cause operating problem and may affect your warranty.**

⚠ **WARNING: Unauthorized modification or the use of non-Everest & Jennings® replacement parts could change the structure of the wheelchair, void the warranty, and create a hazardous condition resulting in serious personal injury.**

MAINTENANCE SCHEDULE				
Procedure	Perform at least every			
	Week	month	3 months	6 months
Check tire wear	✔			
Check handrims	✔			
Check wheel lock engagement	✔			
Check anti-tippers (optional)	✔			
Wipe off frame with soft cloth	✔			
Check handgrips		✔		
Check upholstery		✔		
Check rear wheel adjustment		✔		
Check arms		✔		
Check backposts / push handles		✔		
Check footrests / elevating legrests		✔		
Clean frame			✔	
Check caster stem rotation			✔	
GF dealer maintenance check				✔
Check rear wheel bearings (dealer)				✔
Check caster bearings (dealer)				✔

List of tools

The tools and cleaning supplies listed will assist in the procedures outlined in Part VII.

30 weight oil (available at most auto parts stores)
Phillips screwdriver
soft cloth
mild soap and water solution

General care

Always evaluate the overall operation of your wheelchair. It should function with ease and should travel straight without excessive drag or pull to one side.

Remember, your Graham-Field Health Products dealer knows your wheelchair best when it comes to service and repairs. Contact your dealer with any questions or concerns regarding the safe operation

and maintenance of your wheelchair. Regular maintenance is essential for your safety and continued operation of your wheelchair.

Check tire wear

Examine tires at least once a week for surface wear and cracks and replace them as needed. Replace solid rubber tires when they become loose on the rims or cracks appear.

Check handrims

Check handrims at least once a week. Inspect each handrim for rough or sharp edges and, if any are found, replace handrims immediately. Ensure that all hardware is properly aligned and secure.

Check wheel lock engagement

Check wheel lock engagement at least once a week. See **Adjust wheel locks** in Part V to adjust wheel lock engagement. If a wheel lock is worn or damaged, replace it immediately. Inspect the hardware for looseness or signs of wear.

Ensure that the locking mechanism operates smoothly. The locking assembly should be tight enough so that the wheel can not rotate or the lock slip. Check that the locking shoe does not press against the tire when in the unlocked position. Excessive force should not be required to either engage or release wheel locks. Oil the wheel lock pivot points with one or two drops of 30 weight oil. Remove excess oil and dirt.

Check anti-tippers (optional)

Check the anti-tippers at least once a week. Ensure that the anti-tippers are securely fastened and properly positioned.

Check handgrips

Check handgrips at least once a week. Ensure that they are not ripped; ensure that they are tight and securely fastened.

Check upholstery

Check upholstery at least once a month. Inspect for rips, tears and worn spots. Ensure that all upholstery-attaching screws are present, properly aligned, and well-secured. Use a Phillips screwdriver to tighten upholstery mounting screws. Check attaching screws for sharp edges or stripped screws, and replace if found.

⚠ **WARNING: Worn or torn upholstery, or upholstery with loose hardware, must be replaced immediately. It may not support body weight.**

Check rear wheel adjustment

Inspect the wheels at least once a month. Check alignment by elevating the rear of the wheelchair on a stable object until the rear wheels clear the ground, or placing the wheelchair upside down in a stable position such that the wheels can spin freely. Spin the wheels; there should be no wobble or sideplay, and the wheels should spin freely without binding. The bearings should be clean and rotate smoothly. Check rim sideplay to verify that bearings are not too loose. If there is a problem, contact your Graham-Field Health Products dealer. If adjustment is required, this should be done by your Graham-Field Health Products dealer only.

Check arms

Check arms at least once a month. Inspect for sharp edges or cracks which could weaken the arm, and replace if found. Ensure that all attaching screws are present and tight. Use a Phillips screwdriver to tighten arm pad mounting screws. Check for burrs on the screw heads and replace if found. Ensure that screws do not extend into the padding. Confirm that the posts at base of arm fit correctly in the sockets, snug but not binding.

Check backposts / push handles

Check backposts at least once a month. Ensure that all mounting hardware is securely fastened and that the backposts are not bent or damaged. Contact your dealer if you observe cracking or peeling paint or plating.

Check footrests & elevating legrests

Check footrests and legrests at least once a month. Inspect the locking mechanisms to confirm sure fit. Check for cracks, burrs, or sharp edges, and replace if found. Ensure that the footrest or legrest will automatically lock securely in place and will not accidentally unlock.

Cleaning your Paramount

Wipe off base and seat frame frequently, at least once a week, using a soft cloth. Dry the wheelchair immediately if exposed to moisture. Clean the frame every three months with a mild soap and water solution. The frame chrome does not need to be waxed. Do not use solvents, abrasive waxes, caustic chemicals or spray silicone. Never use abrasive cleansers; they could scratch the finish. Never use steam or high pressure cleaners. Clean upholstery and plastic components at least once a month with a mild soap and water solution.

Check casters

Check the caster stems for proper rotation at least every three months. The caster fork must swivel freely to facilitate steering and handling. Adjusting the stem nut varies the amount of force required to turn the caster. If the nut is too loose, the caster will flutter or shimmy; if the nut is too tight, the wheelchair will be difficult to steer. If the caster stem requires adjustment, or the stem bearings require replacement, contact your Graham-Field Health Products dealer. Ensure that stems are firmly attached to forks, and that forks and stems are not bent. Evaluate all threads, locking nuts and bearings.

Check wheel bearings

Have your Graham-Field Health Products dealer check caster and rear wheel axle bearings at least every six months.

VIII TROUBLESHOOTING

Continual use of your Paramount necessitates maintenance, especially if the factory-set adjustments have been altered. The following troubleshooting guide lists several common problems that may occur, and offers corrective actions for each. If you are unsure of the solution or unable to diagnose the problem, do not hesitate to ask your Graham-Field Health Products dealer for assistance.

SYMPTOM						
looseness in wheelchair	squeaks / rattles	caster flutter	sluggish turning	chair veers left	chair veers right	
						PROBABLE CAUSE AND CORRECTIVE ACTION
✓	✓	✓	✓			Nuts and/or bolts may be loose. If so, tighten. Bolts should be snug.
		✓	✓	✓	✓	Rear wheels and/or casters may be adjusted improperly. Insure that both rear wheels are mounted in identical positions, and that casters are mounted in identical positions.
		✓	✓	✓	✓	Caster stem(s) may be adjusted improperly. Correct adjustment.

Note: Use only Everest & Jennings® replacement parts. A Paramount parts catalog is available through Graham-Field Health Products dealers to assist in the ordering of parts.

▲ **Caution: A complete inspection of your wheelchair, including maintenance, servicing and safety checks, should be performed by a Graham-Field Health Products dealer at least once a year.**

⚠ **WARNING: Unauthorized modification or the use of non-Everest & Jennings® replacement parts could change the structure of the wheelchair, void the warranty, and create a hazardous condition, which could result in serious personal injury.**

IX LIMITED WARRANTY

This warranty has been drafted to comply with the Federal Law applicable to products manufactured after July 4, 1975. This warranty is extended only to the original purchaser/consumer or dealer/non-consumer and to no other purchaser or transferee. GF Health Products, Inc. warrants the Paramount against manufacturing defects in materials and workmanship as listed below:

	WARRANTY PERIOD			
	3 mo.	6 mo.	1 yr.	Lifetime* of Wheelchair
PARAMOUNT MANUAL WHEELCHAIR				
Sideframes, crossbraces				✓
Wheels, handrims, front rigging, forks			✓	
Upholstered components, plastic parts, painted surfaces, rubber parts, bearings, and any other parts not specifically identified above		✓		
REPLACEMENT PARTS**				
Sideframes, crossbraces		✓		
All other components	✓			

* The average life expectancy of a wheelchair under normal everyday use is approximately five (5) years.

** The warranty period is as designated above. If a part is replaced under warranty, the original warranty period will not be affected. All other replacement parts will be subject to the warranty period specified.

The Warranty period for the consumer commences on the first date a product is delivered to the consumer by the seller/dealer. If the product is rented or leased, the warranty period commences on the invoice date from GF Health Products, Inc. A copy of the invoice showing date of purchase must be provided when submitting warranty claims. When proof of purchase date is not provided, warranty coverage shall commence upon GF Health Products, Inc.'s invoice date to the dealer/purchaser.

If within the warranty period, the product or component part is proven to GF Health Products, Inc.'s satisfaction to be defective, GF Health Products, Inc. shall provide, at its option, one of the following: (1) repair or replacement of any defective or nonconforming part or product or (2) a credit and/or refund of the original selling price made to GF Health Products, Inc.'s initial customer on a prorated or depreciated basis. GF HEALTH PRODUCTS, INC.'S SOLE OBLIGATION AND YOUR EXCLUSIVE REMEDY UNDER THIS WARRANTY SHALL BE LIMITED TO SUCH REPAIR, REPLACEMENT, CREDIT AND/OR REFUND. This warranty does not include any labor charges incurred in replacement part(s) installation or any associated freight or shipping charges to the manufacturer.

LIMITATIONS AND EXCLUSIONS: The foregoing warranty shall not apply to serial numbered products if the serial number has been removed or defaced. Products subjected to negligence, abuse, misuse, improper operation, improper maintenance, improper cleaning, improper storage, or damages beyond GF Health Products, Inc.'s control are not covered by this warranty, and that evaluation shall be solely determined by GF Health Products, Inc. This warranty shall not apply to problems arising from normal wear and tear or failure to follow instructions. The warranty shall also not apply to products modified without GF Health Products, Inc.'s express written consent; nor shall it apply if parts not manufactured by GF Health Products, Inc., or if parts not complying with original equipment specifications are added to GF Health Products, Inc. products; or if the product or part is serviced by an entity not authorized by GF Health Products, Inc.

THE FOREGOING WARRANTY IS EXCLUSIVE AND IN LIEU OF ALL OTHER EXPRESS WARRANTIES AND IMPLIED WARRANTIES, INCLUDING BUT NOT LIMITED TO THE IMPLIED WARRANTIES OF MERCHANTABILITY AND FITNESS FOR A PARTICULAR PURPOSE, AND SHALL NOT EXTEND BEYOND THE DURATION OF THE EXPRESS WARRANTY PROVIDED HEREIN, AND THE REMEDY FOR VIOLATIONS OF ANY IMPLIED WARRANTY SHALL BE LIMITED TO THE REPAIR, REPLACEMENT, CREDIT AND/OR REFUND OF THE DEFECTIVE PRODUCT OR PART PURSUANT TO THE TERMS CONTAINED HEREIN. GF HEALTH PRODUCTS, INC. SHALL NOT BE LIABLE FOR ANY CONSEQUENTIAL OR INCIDENTAL DAMAGES WHATSOEVER.

This warranty gives you specific legal rights and you may also have other legal rights which vary from state to state (province to province). Some states (provinces) do not allow the exclusion or limitation of incidental or consequential damage, or limitation on how long an implied warranty lasts, so the above exclusion and limitation may not apply to you.

For warranty service, please contact the authorized dealer from whom you acquired your GF Health Products, Inc. product. In the event you do not receive satisfactory warranty service, please contact GF Health Products, Inc. at the address on the back cover. Do not return products to our factory without prior authorization. This warranty contains the entire agreement between the parties and supersedes any prior, contrary or additional representations or understandings, whether oral or written, concerning our warranty policy.

X INDEX

A
Adjustments 14
Anti-tippers, check 27
Arm, install 15
Arm, remove 15
Arms, check 28

B
Backposts, check 29
Balance 9

C
Casters 14
Caster stems, check 29
Caution, significance 4
Cleaning your Paramount 29
Crossbraces, tighten 21
Curbs and steps 13

E
Elevating legrest, attach 18
Elevating legrest, remove 18
Elevating legrest—detachable, swingaway 18
Elevating legrest calf pad position, adjust 20
Elevating legrest elevation, adjust 19

F
Footrest, attach 16
Footrest, remove 16
Footrest—detachable, swingaway 16

G
Getting started 8

H
Handling tips 9
Handrims, check 27

I
Introduction 3

L
Limited warranty 33

M
Maintenance 25

N
Note, significance 4

P
Paramount, illustration 8

R
Ramps and Inclines 12
Reaching / bending 10
Rear wheel adjustment, check 28
Rear wheels 14

S
Safety precautions 5

T
Tires, check 27
Tools, for adjustment, list 14
Tools, for maintenance, list 26
Transfer activities 9
Transporting the E&J Paramount 23
Troubleshooting 31

U
Upholstery, check 28

W
Warning, significance 4,6
Warnings 5
Warranty, limited 33
Wheel bearings, check 30
Wheel lock engagement, check 27
Wheel locks, adjust 22

Everest & Jennings®

A Graham-Field Brand

Corporate Headquarters:

Graham-Field Health Products
2935 Northeast Parkway
Atlanta, Georgia 30360 U.S.A.

telephone: 800-347-5678, 770-447-1609
fax: 800-726-0601, 678-291-3232

www.grahamfield.com